CASH VALVE™ TYPE C-776 SAFETY VALVES

A full lift ASME Section VIII air/gas and cryogenic, UV National Board certified safety valve suitable for cryogenic service

UV

FEATURES

- Ideal for cryogenic service to -320°F (-195°C).
- Kel-F® soft seat disc ensures positive reseating and leak tight seal.
- Full lift maximum discharge capacity.
- Unobstructed flow through top guided design.
- Pressure tight dome.
- Stainless steel springs as standard. Inconel® springs supplied for higher pressures.
- All parts are commercially cleaned for oxygen service.
- Built to ASME Code Section VIII for cryogenic service.
- Rated capacity: 110% of set pressure.

GENERAL APPLICATION

Protects piping, storage tanks and process equipment used in the distribution of industrial gases against damage caused by liquefied gas expansion. Ideal for oxygen, nitrogen, argon, carbon dioxide, helium, hydrogen and other industrial gases.

TECHNICAL DATA

Materials:	Bronze
Sizes:	½" x ¾" to 2" x 2½"
Connections:	Threaded NPTF
Pressure ranges	
½" to ¾" size:	15 to 600 psig* (1 to 41.3 barg)
1" to 2" size:	15 to 500 psig (1 to 34.5 barg)
Temperature range:	-320 to +150°F (-195 to 65.6°C)

* ¾" x 1¼" maximum pressure 500 psig (34.5 barg)

© 2017 Emerson. All Rights Reserved.

CASH VALVE™ TYPE C-776 SAFETY VALVES

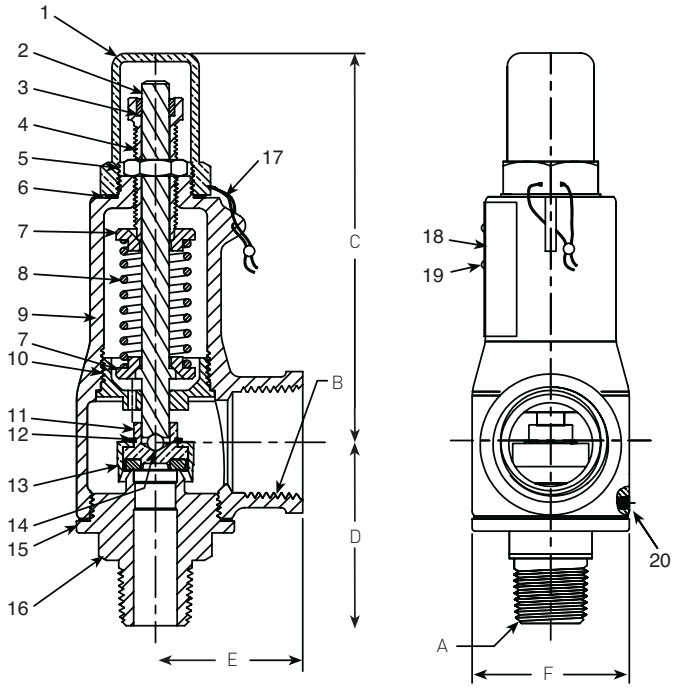

LIST OF MATERIALS

Item	Qty.	Description	Material
1	1	Adj. screw cap	Brass ASTM B16
2	1	Pull rod	Brass ASTM B16
3	1	Bushing	Virgin PTFE
4	1	Adjusting screw	Brass ASTM B16
5	1	Nut	Brass ASTM B16
6	1	Gasket	Gylon PTFE
7	2	Pressure plate	Brass ASTM B16
8	1	Spring	302 SST A313/Inconel® B637
9	1	Body	Bronze
10	1	Guide bushing	Brass ASTM B16
11	1	Seat assembly	Brass/Kel-F®
12	1	Retaining ring	SST
13	1	Seat shell	Brass ASTM B16
14	1	Ball	Monel®
15	1	Gasket	Gylon PTFE
16	1	Body seat	Brass ASTM B16
17	1	Wire seal	SST/Lead
18	1	Name plate	Aluminum
19	2	Drive screw	SST
20	1	Set screw	SST

DIMENSIONS

Valve size	Inlet size A	Outlet size B	C In. (mm)	D In. (mm)	E In. (mm)	F In. (mm)	Orifice Area in² (mm²)	Weight lb. (kg)
½"	½"	¾"	4.46 (113.3)	2.11 (53.5)	1.69 (42.9)	1.81 (46.0)	0.169 (109)	2.2 (1.00)
½"	½"	1"	4.46 (113.3)	2.11 (53.5)	1.69 (42.9)	1.81 (46.0)	0.169 (109)	2.2 (1.00)
¾"	¾"	1"	4.46 (113.3)	2.11 (53.5)	1.69 (42.9)	1.81 (46.0)	0.169 (109)	2.2 (1.00)
¾"	¾"	1¼"	6.55 (166.3)	2.88 (73.1)	2.15 (54.6)	2.63 (66.7)	0.486 (314)	3.5 (1.59)
1"	1"	1¼"	6.55 (166.3)	2.88 (73.1)	2.15 (54.6)	2.63 (66.7)	0.486 (314)	3.5 (1.59)
1¼"	1¼"	1½"	7.32 (185.9)	3.06 (77.7)	2.37 (60.1)	3.00 (76.2)	0.645 (416)	4.6 (2.09)
1½"	1½"	2"	9.36 (237.6)	3.28 (83.3)	2.75 (69.9)	3.74 (95.0)	1.024 (661)	8.8 (3.99)
2"	2"	2½"	10.99 (279.1)	3.74 (94.9)	3.19 (81.0)	4.65 (118.0)	1.667 (1075)	15.4 (6.99)

NOTE

NPTF, also referred to as 'Dryseal' thread, is designed to provide a more leak-free seal without the use of PTFE tape or other sealant compound. NPTF threads are interchangeable with NPT threads and are standard on all Cash Valve products.

SPECIFICATIONS - Capacity (Air capacity in SCFM by size - ambient temperature)

Set pressure psig (bar)	½" x ¾" ½" x 1" ¾" x 1"	¾" x 1¼" 1" x 1¼"	1¼" x 1½"	1½" x 2"	2" x 2½"
15 (1.03)	80	230	305	485	789
20 (1.38)	92	265	352	559	910
30 (2.07)	117	336	446	707	1152
40 (2.76)	144	413	548	870	1417
50 (3.45)	171	491	651	1034	1683
60 (4.14)	198	568	754	1197	1948
70 (4.83)	224	645	857	1360	2214
80 (5.52)	251	723	959	1523	2479
90 (6.21)	278	800	1062	1686	2745
100 (6.90)	305	878	1165	1849	3010
110 (7.58)	332	955	1268	2012	3276
120 (8.27)	359	1032	1370	2175	3541
130 (8.96)	386	1110	1473	2339	3807
140 (9.65)	413	1187	1576	2502	4073
150 (10.34)	440	1265	1679	2665	4338
160 (11.03)	467	1342	1781	2828	4604
170 (11.72)	494	1420	1884	2991	4869
180 (12.41)	521	1497	1987	3154	5135
190 (13.10)	547	1574	2090	3317	5400
200 (13.79)	574	1652	2192	3480	5666
210 (14.48)	601	1729	2295	3644	5931
220 (15.17)	628	1807	2398	3807	6197
230 (15.86)	655	1884	2500	3970	6463
240 (16.55)	682	1962	2603	4133	6728
250 (17.24)	709	2039	2706	4296	6994
260 (17.93)	736	2116	2809	4459	7259
270 (18.62)	763	2194	2911	4622	7525
280 (19.31)	790	2271	3014	4785	7790
290 (20.00)	817	2349	3117	4949	8056
300 (20.69)	844	2426	3220	5112	8321
310 (21.37)	871	2503	3322	5275	8587
320 (22.06)	897	2581	3425	5438	8852
330 (22.75)	924	2658	3528	5601	9118
340 (23.44)	951	2736	3631	5764	9384
350 (24.13)	978	2813	3733	5927	9649
400 (27.58)	1113	3200	4247	6743	10977
450 (31.03)	1247	3587	4761	7558	12305
500 (34.48)	1382	3974	5275	8374	13632
550 (37.92)	1517	----	----	----	----
600 (41.37)	1651	----	----	----	----

Discharge capacities in standard cubic feet per minute of air at 110% of set pressure or set pressure +3 psi, whichever is greater.

Gas	Oxygen	Nitrogen	Hydrogen	Helium	CO_2	Argon	Methane
Factor	1.05	0.98	0.26	0.37	1.24	1.18	0.74

1. For gases other than air, multiply the required gas flow for your gas by the appropriate factor above to obtain the equivalent air flow. Then use the capacity chart above for determining valve size.
2. To find the gas flow equivalent to the air flow given in the above chart, divide the chart flow by the appropriate factor above.

Capacity data based on a maximum back pressure of 10%.

CASH VALVE™ TYPE C-776 SAFETY VALVES

SELECTION GUIDE

Example:	C776	B	D	CD	K	01	-	K	M	1

Model

C776 C776 valve

Connection/body and nozzle material

B Male x female NPTF bronze

Orifice area

		Valve (inlet/outlet) size	
D	(0.169 in²)	**CD**	½ x ¾
D	(0.169 in²)	**CE**	½ x 1
D	(0.169 in²)	**DE**	¾ x 1
E	(0.340 in²)	**AP**	1 x 1¼
F	(0.486 in²)	**DF**	¾ x 1¼
F	(0.486 in²)	**EF**	1 x 1¼
G	(0.645 in²)	**FG**	1¼ x 1½
H	(1.024 in²)	**GH**	1½ x 2
J	(1.667 in²)	**HJ**	2 x 2½

Seat material

K Kel-F®

Variation

01 Threaded cap

Design revision

(-) Indicates original design

Service

K Air/gas ASME Section VIII

N Non-code air/gas

Spring material

M 302 SST or Inconel® X750

Spring range

Refer to table below

STANDARD SPRING RANGES (PSIG)

Orifice area	Size	1	2	3	4	5	6	7	8	9	10	11	12	13	14	15
D - [0.169 in²]	CD - ½" x ¾" CE - ½" x 1" DE - ¾" x 1"	15-25	26-35	36-46	47-61	62-80	81-105	106-135	136-185	186-250	251-315	316-435	436-500	501-550	551-600	----
E - [0.340 in²]	AP - 1" x 1¼"	21-36	37-56	57-70	71-85	86-107	108-133	134-165	166-220	221-311	312-360	361-400	----	----	----	----
F - [0.486 in²]	DF - ¾" x 1¼" EF - 1" x 1¼"	15-25	26-37	38-46	47-58	59-73	74-92	93-110	111-120	121-180	181-250	251-325	326-359	360-390	391-435	436-500
G - [0.645 in²]	FG - 1¼" x 1½"	15-25	26-38	39-46	47-57	58-70	71-90	91-115	116-130	131-175	176-200	201-300	301-400	401-450	451-500	----
H - [1.024 in²]	GH - 1½" x 2"	15-28	29-47	48-69	70-91	92-113	114-164	165-232	254-274	275-315	316-348	349-424	425-500	----	----	----
J - [1.667 in²]	HJ - 2" x 2½"	15-25	26-40	41-57	58-74	75-98	99-130	131-150	151-205	206-258	259-300	301-400	401-500	----	----	----

NOTES

Please specify the required set point on your order.

VCTDS-00515-EN © 2015, 2022 Emerson Electric Co. All rights reserved 02/22. Cash Valve is a mark owned by one of the companies in the Emerson Automation Solutions business unit of Emerson Electric Co. The Emerson logo is a trademark and service mark of Emerson Electric Co. All other marks are the property of their prospective owners.

The contents of this publication are presented for informational purposes only, and while every effort has been made to ensure their accuracy, they are not to be construed as warranties or guarantees, express or implied, regarding the products or services described herein or their use or applicability. All sales are governed by our terms and conditions, which are available upon request. We reserve the right to modify or improve the designs or specifications of such products at any time without notice.

Emerson Electric Co. does not assume responsibility for the selection, use or maintenance of any product. Responsibility for proper selection, use and maintenance of any Emerson Electric Co. product remains solely with the purchaser.

Emerson.com