Pressure builder/economizer regulator Type PBE-5

Installation & Maintenance Instructions

EMERSON

CASH VALVE

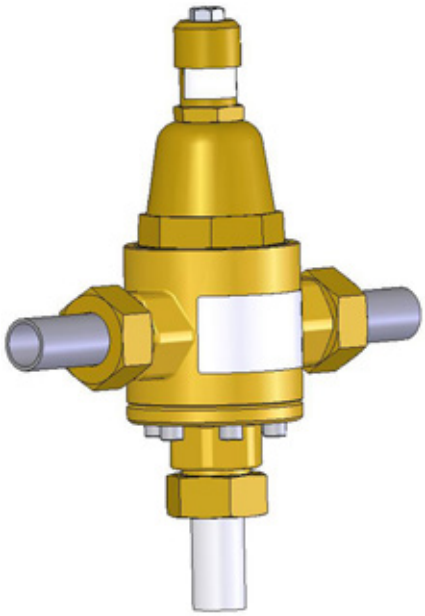

Description

The type PBE-5 regulator is a fully automatic pressure building/economizer valve designed for cryogenic liquid systems. It is equipped with a non-adjustable/fixed set point economizer. The valve is also equipped with bullnose tube connections that incorporates a check valve to prevent backflow into the economizer. An indicating adjustment screw provides an easy field adjustment reference.

Specifation data

Service	:	Cryogenic liquids
Sizes	:	0.839" dia. 316L SST tube
Connections	:	SST Bullnose tube/union nut
Body material	:	ASTM CA377 brass forging
Temperature rating	:	-320°F (-196°C) to +150°F (+66°C)
Max. initial pressure	:	650 psi (45 bar)
Available pressure ranges	:	0-30 psig (0-2 bar)
		20-50 psig (1.5-3.5 bar)
		40-80 psig (3-5.5 bar)
		75-150 psig (5-10.5 bar)
		100-275 psig (7-19 bar)
		200-350 psig (14-24 bar)
		300-600 psig (20-40 bar)
Capacity	:	For specific capacity information consult the factory.

General installation instructions

For ease of operation and maintenance, it is suggested that manual shut-off valves be installed upstream and downstream from the valve. Before installing the valve, the piping and valve should be thoroughly flushed out to remove any foreign material.

Construction

See component description for materials of construction.

Operating instructions

Adjusting the pressure build set pressure:

To increase the set pressure, turn the adjusting screw clockwise (into the spring chamber).
To decrease the pressure, turn the adjusting screw counter-clockwise (out of the spring chamber).

The economizer set pressure is fixed. The economizer will begin to open between approximately 8-11 psi above the pressure build set point.

Maintenance instructions

CAUTION:

Before attempting to replace any spare parts, be sure to shut off all pressure connections to the valve. With the valve closed however, system pressure could still be locked between the shut off valve and the inlet and/or outlet sides or the regulator. Before proceeding with any valve service be certain to relieve the pressure from both sides of the regulator.

Refer to section view above for parts identification. Repair parts can easily be installed without removing the regulator from the line.

Emerson reserves the right to change the content without notice

I0478 Rev. New

CAVMC-6328-EN-1306

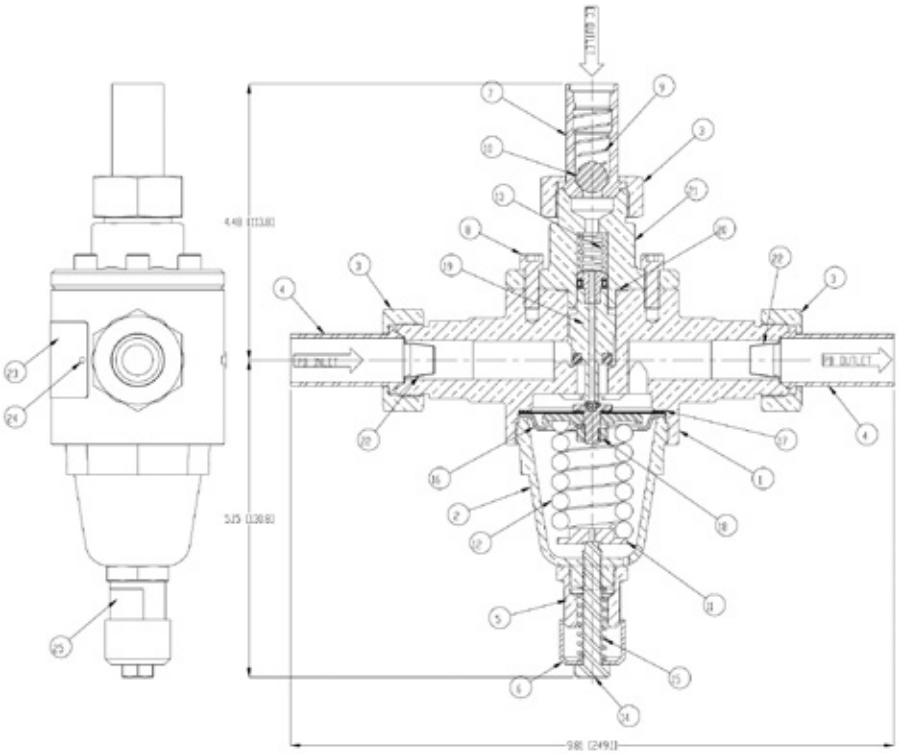

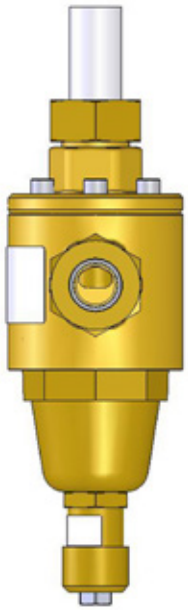

Parts list

No.	Part number	Description	Material	Qty.
1	22770	Body	Brass	1
2	22779	Spring chamber	Brass	1
3	22182	Union nut	Brass	3
4	22185	Tube	SST	2
5	22766	Adjusting guide	Brass	1
6	22764	Adjusting cap	Brass	1
7	22183	Tube	SST	1
8	22243	Cap screw	SST	6
9	22184	Check spring	SST	1
10	22186	Ball	SST	1
11	08225	Spring button	Brass	1
12		Pressure spring	SST	1
13	22776	Piston spring	SST	1
14	22763	Adjusting screw	SST	1
15	22765	Adjusting spring	SST	1
16	08243	Diaphragm stop	Brass	1
17	12003	Gasket	Gylon	1
18	22768	Diaphragm sub		1
	22061	Pressure plate	Brass	1
	07999	Hex nut	SST	1
	12002	Gasket	Gylon	1
	10993	Lock washer	SST	1
	22789	Pusher post sub		1
	22767	Pusher post	SST	1
	22787	Seat ring	Brass	1
	22788	5/32" ball	SST	1
	16586	Diaphragm	Bronze	4
19	22780	Piston sub		1
	22771	Piston sub		1
	22772	Piston	Brass	1
	21510	Seat disc	PTFE	1
	22774	Adapter	Brass	1
	22773	Seal	PTFE/SST	1
20	21518	Gasket	Gylon	1
21	22775	Bottom plug	Brass	1
22	22860	Filter	SST	2
23	13399	Nameplate	Aluminum	1
24	02533	Drive screw	SST	2
25		Set label		1

Pressure spring & set label chart

Range	Spring	Set label
0-30	08238	22861
20-50	08239	22862
40-80	08240	22863
75-150	08241	22864
100-275	08242	22790
200-350	14272	22792

Type PBE-5 pressure builder

*** Capacity table for pressure building regulators (Q1)**

	Tank head [Ft.]	Tank pressure [psig] 50	100	150	200	250	300	350	400	450	500	550	600	Max. liquid flow (V_1)
Oxygen	1	590	785	940	1073	1191	1299	1398	1491	1578	1661	1740	1815	TYPICAL
	2.5	935	1243	1488	1698	1885	2055	2212	2358	2496	2627	2752	2871	
	5	1315	1744	2086	2398	2641	2879	3099	3304	3496	3679	3853	4020	
	10	1899	2508	2996	3414	3787	4126	4439	4732	5008	5269	5518	5756	
	20	2736	3586	4270	4858	5383	5861	6303	6715	7104	7473	7824	8160	
Nitrogen	1	559	744	891	1018	1130	1232	1326	1414	1497	1575	1650	1721	
	2.5	883	1174	1406	1605	1782	1943	2091	2230	2360	2484	2602	2714	
	5	1246	1654	1980	2259	2508	2734	2942	3137	3320	3494	3660	3818	
	10	1792	2372	2836	3234	3588	3910	4208	4486	4748	4996	5232	5458	
	20	2566	3378	4029	4589	5088	5542	5961	6353	6722	7072	7405	7724	
Hydrogen	1	874	1163	1394	1592	1767	1927	2075	2212	2342	2465	2581	2693	0.79
	2.5	1427	1900	2277	2599	2886	3147	3388	3613	3824	4025	4216	4398	1.25
	5	1955	2602	3118	3560	3952	4310	4639	4947	5237	5511	5773	6023	1.77
	10	2766	3681	4411	5035	5590	6095	6562	6997	7406	7795	8164	8518	2.50
	20	3949	5253	6292	7183	7974	8694	9358	9979	10563	11116	11643	12148	3.54
Helium	1	1008	1343	1609	1837	2039	2224	2394	2553	2702	2844	2979	3108	TYPICAL
	2.5	1595	2123	2544	2904	3225	3516	3785	4036	4273	4497	4710	4914	
	5	2241	2982	3573	4079	4528	4937	5315	5668	5999	6314	6613	6900	
	10	3204	4262	5105	5827	6469	7053	7593	8096	8570	9019	9447	9856	
	20	4541	6034	7225	8246	9154	9980	10742	11143	12123	12758	13363	13941	
Argon	1	588	783	938	1070	1188	1295	1394	1487	1574	1656	1735	1810	
	2.5	934	1240	1484	1694	1880	2050	2206	2352	2490	2620	2744	2863	
	5	1316	1744	2086	2379	2640	2878	3097	3301	3494	3677	3851	4017	
	10	1902	2508	2994	3411	3783	4121	4433	4725	5000	5260	5508	5746	
	20	2749	3592	4272	4857	5379	5855	6295	6706	7093	7461	7811	8145	
CO_2	1	412	549	657	750	833	908	977	1042	1103	1161	1216	1268	
	2.5	656	871	1042	1189	1320	1439	1549	1651	1748	1839	1926	2009	
	5	926	1226	1466	1672	1855	2022	2176	2320	2455	2583	2706	2822	
	10	1339	1764	2105	2397	2658	2895	3115	3320	3512	3695	3869	4036	
	20	1942	2531	3007	3418	3784	4118	4427	4715	4987	5245	5491	5726	

*Base flows are based on gas temperatures of close to saturation or boiling temperatures of the fluids.

Capacity information for pressure building regulators & general cryogenic regulators

Column 1 Valve size & type	Column 2 Cv rating	Column 3 Size factor (F_1)	Column 4 Spring factor (F_2)	Column 5 Spring range
3/8 & 1/2	1.2	1.00	3.00	20-50
			2.70	40-80
			2.10	75-150
			1.70	100-275
			1.30	200-350
			0.80	300-600

Instructions

For pressure building applications use the table at the top to obtain the base flow. Using the formula at next page, the size factor from (Column 3) and the spring factor from (Column 4), calculate the valve flow. Size the valve according to the requirements.

For other pressure reducing applications, using the formula at next page, the C_V information from (Column 2), and spring factor information from (Column 4) to calculate the valve flow. Size the valve per flow requirements. This data applies only to valves built for cryogenic service.

Formula for pressure building applications

Gas phase

$$Q = Q_1 \times F_1 \times \frac{F_2}{100} \times \text{Rise}$$

Liquid phase

$$V = V_1 \times F_1 \times \frac{F_2}{100} \times \text{Rise}$$

Where:

Q = Valve capacity [SCFH]
Q_1 = Base flow - from table [SCFH]
F_1 = Valve size factor (Column 3)
F_2 = % Maximum flow / psi rise (Column 4)
V = Valve capacity [GPM]
V_1 = Base flow - from table [GPM]
Rise = Amount, in psi, system pressure can be permitted to rise from tight pressure shut-off.

Flow formula for pressure reducing valves

Gas phase

$$Q = \frac{963 \times C_{VM} \times \sqrt{(P_1 - P_2)(P_1 + P_2)}}{\sqrt{G \times T_f}}$$

Liquid phase

$$V = \frac{C_{VM} \times \sqrt{P_1 - P_2}}{\sqrt{G_f}}$$

Where:

Q = Valve capacity [SCFH] at 14.7 psia and 60°F
V = Valve capacity [GPM]
P_1 = Inlet pressure [psia]
P_2 = Outlet pressure [psia]
G = Gas specific gravity [air = 1.0]
G_f = Specific gravity at flowing temperature
T_f = Temperature °R or (°F + 460)
$C_{VM} = C_V \times \frac{F_2}{100} \times \text{Rise}$

Where:

C_V = Liquid C_V = GPM for 1.0 psi pressure drop (Column 2)
F_2 = Spring factor for desired spring range (Column 4 & 5)
Rise = Amount, in psi, regulated pressure can be permitted to rise from tight pressure shut-off.
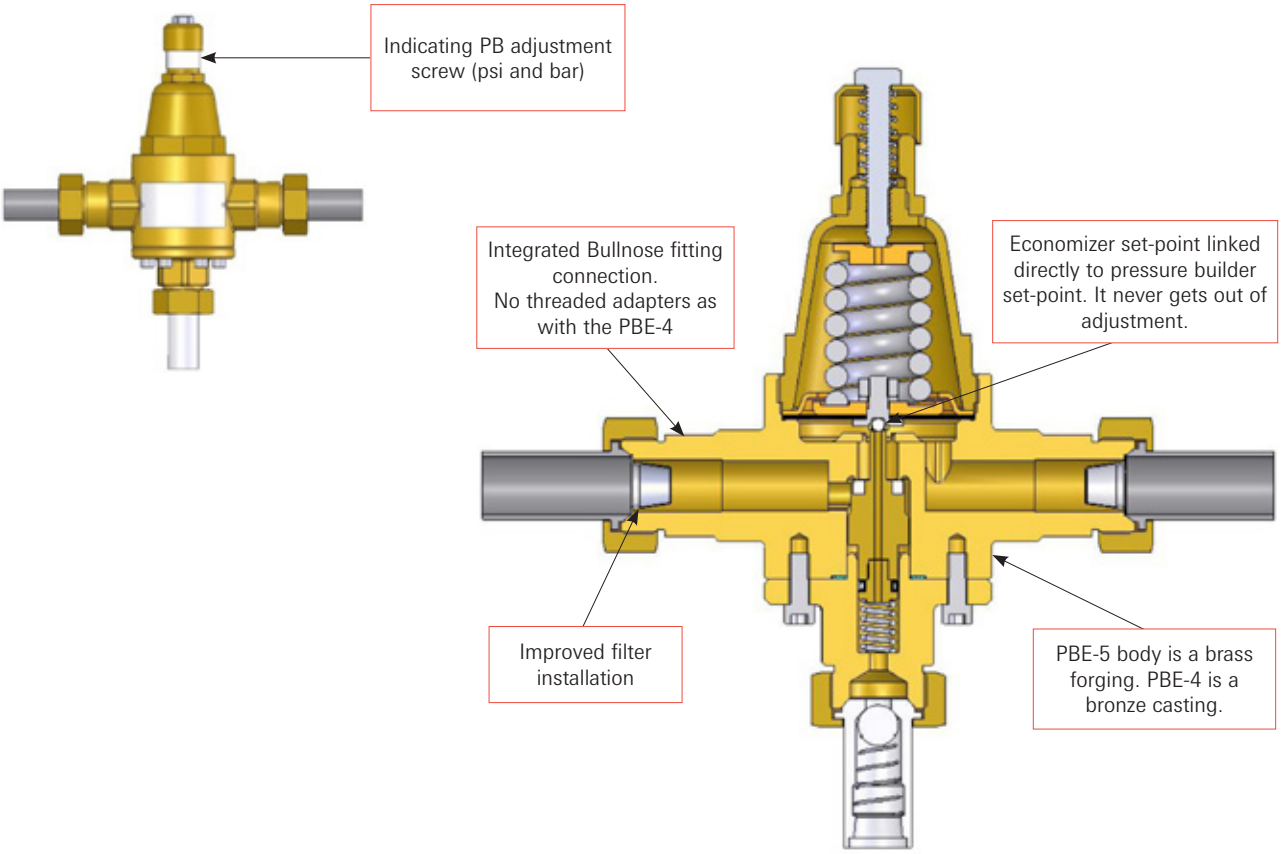
Cash valve PBE-5 improvements from PBE-4